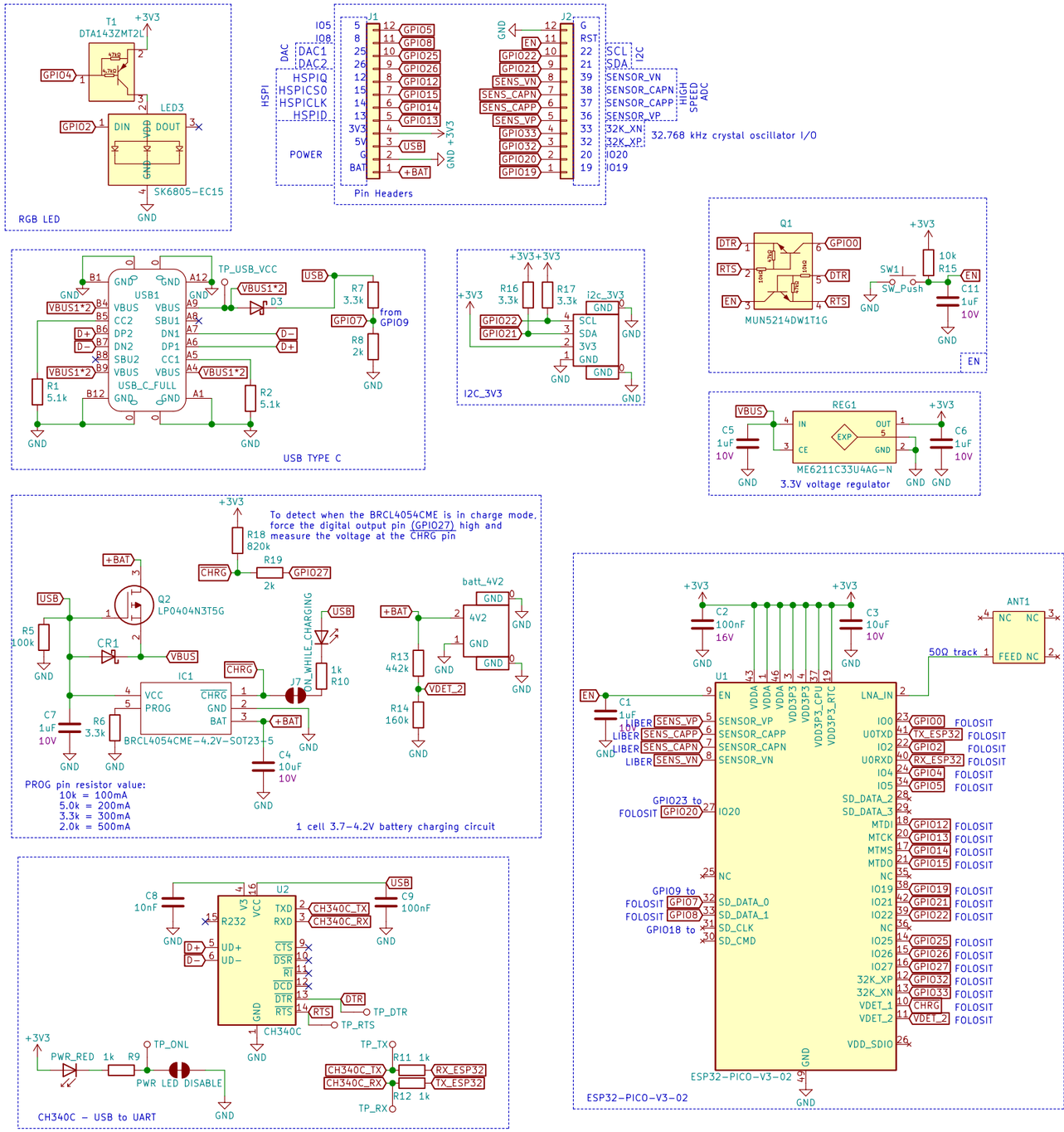

Schematic: Victor

GroundStudio.ro

Sheet: /

File: REV 0.0.1 JVYHKS_GS CARBON V3 C1.sch

Title: Carbon V3 C1

Size: A3	Date: 2021-01-25	**Rev: 0.0.1**
KiCad E.D.A. kicad (5.1.10)-1		Id: 1/1